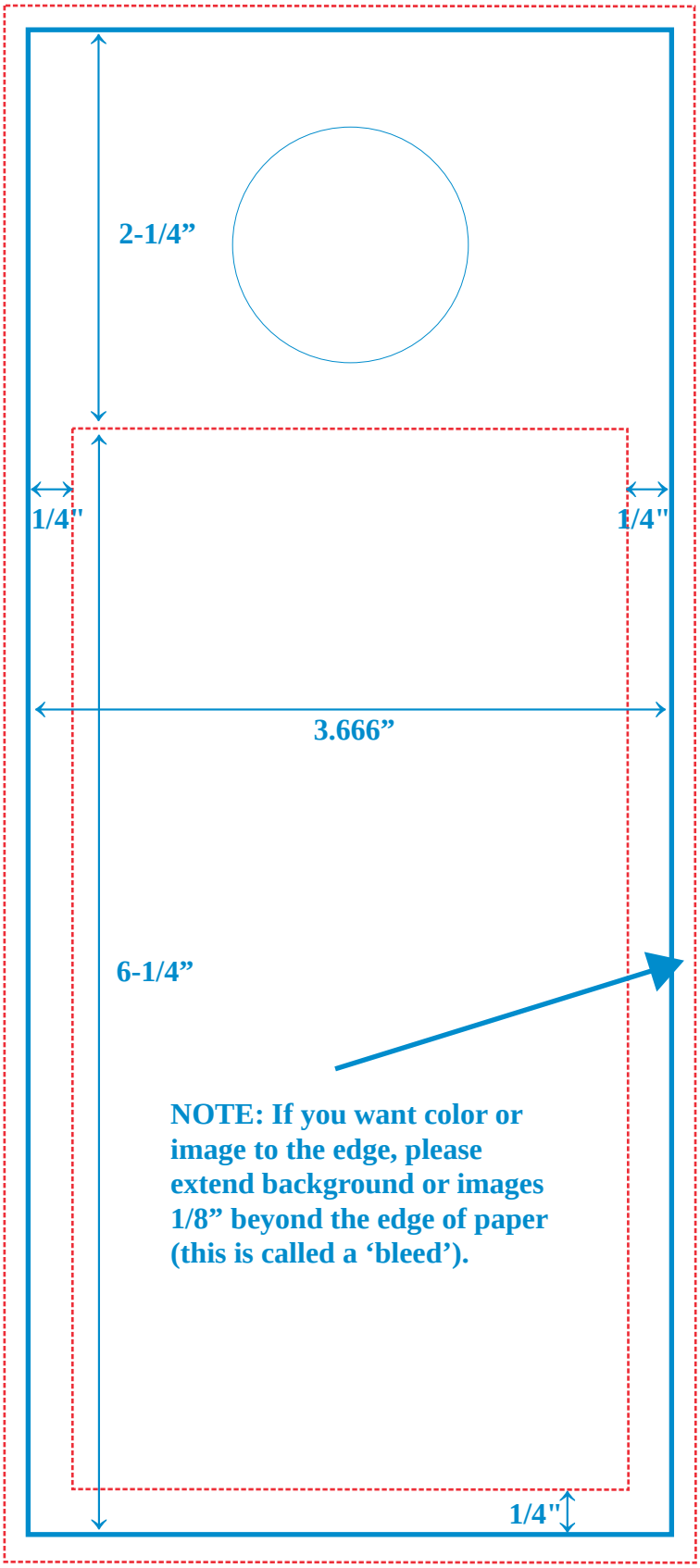
2-1/4”
1/4"
1/4"
3.666”
6-1/4”
NOTE: If you want color or image to the edge, please extend background or images 1/8” beyond the edge of paper (this is called a ‘bleed’).
1/4"